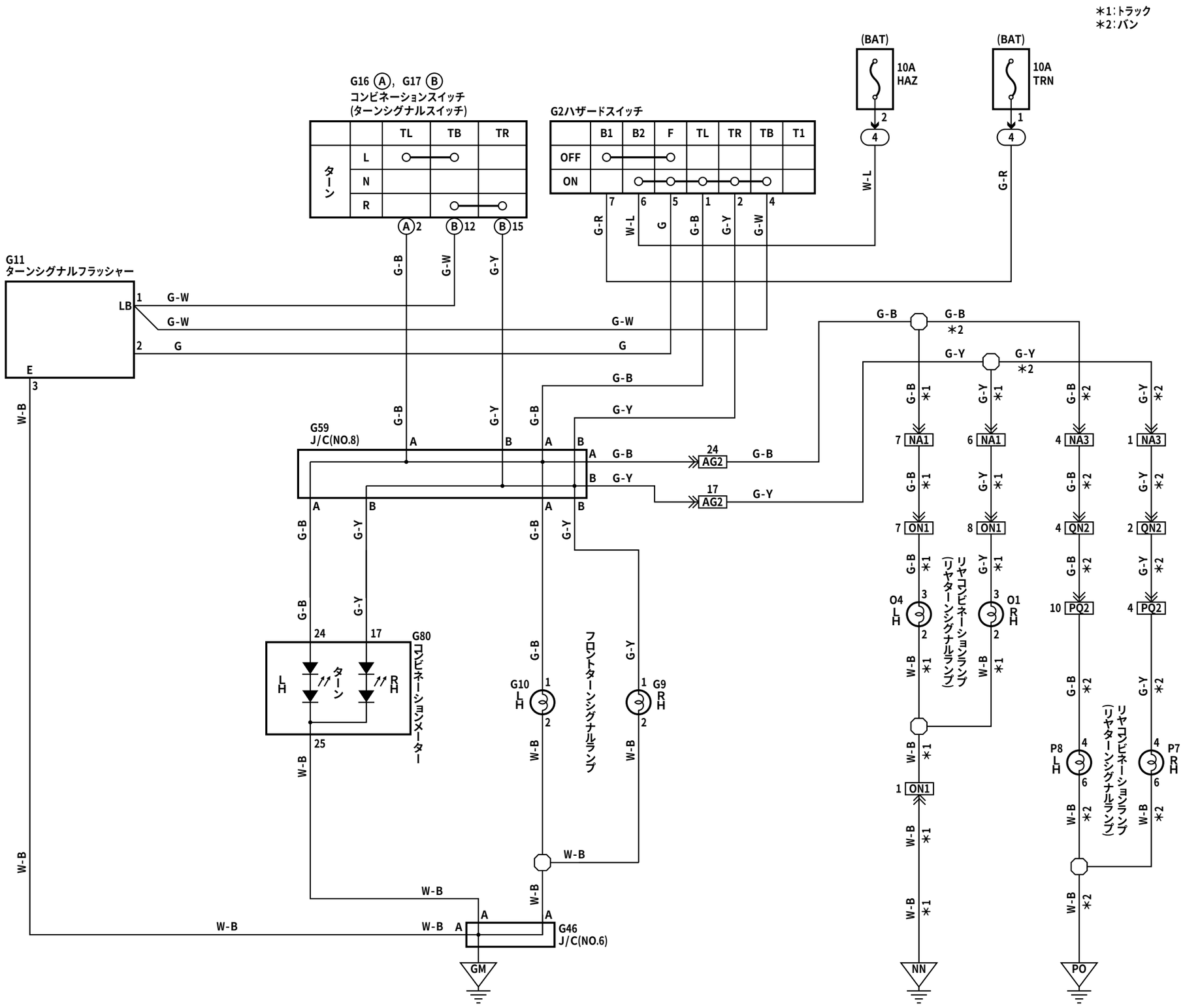


hisbh049
x311i0608000323